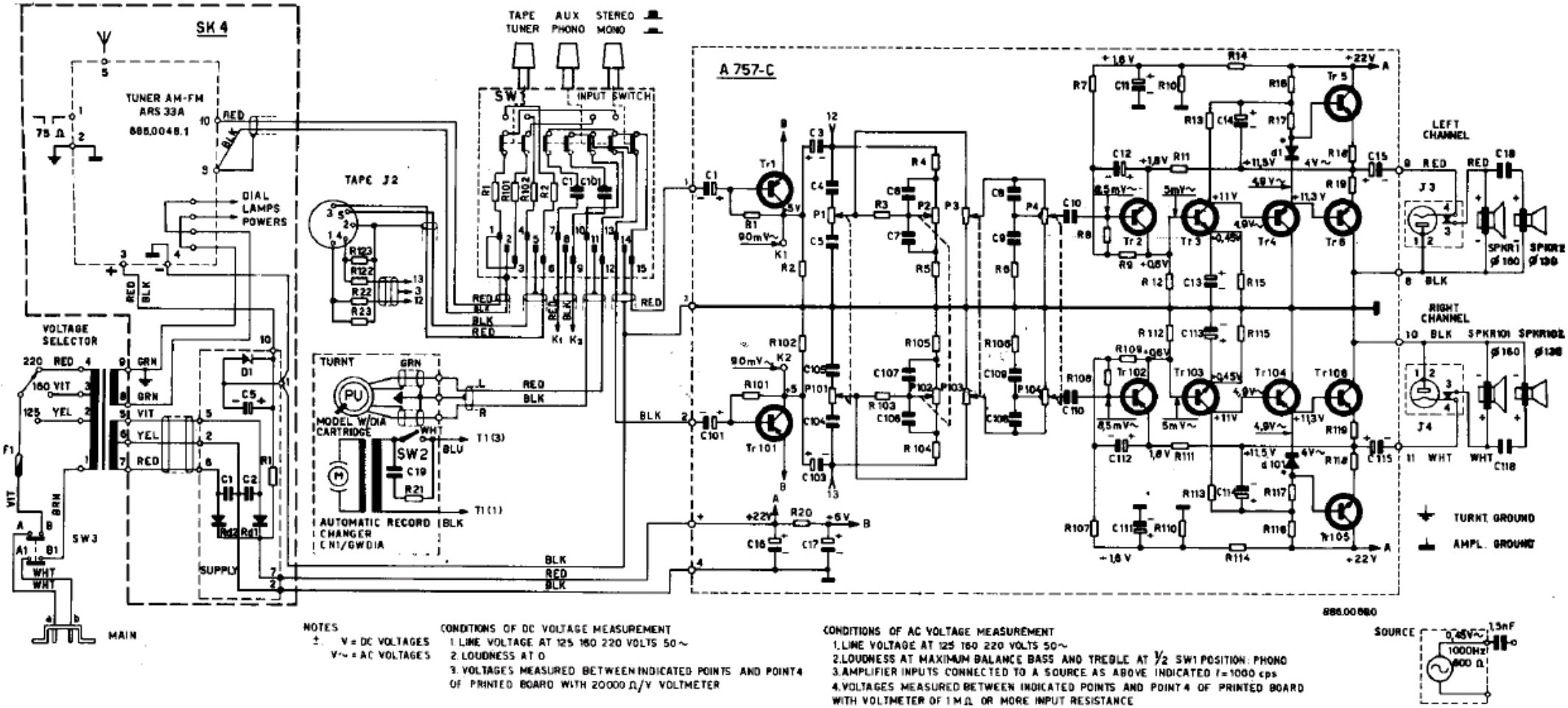

NOTES
± V = DC VOLTAGES
V~ = AC VOLTAGES

CONDITIONS OF DC VOLTAGE MEASUREMENT
1. LINE VOLTAGE AT 125 160 220 VOLTS 50~
2. LOUDNESS AT 0
3. VOLTAGES MEASURED BETWEEN INDICATED POINTS AND POINT 4 OF PRINTED BOARD WITH 20000 Ω/V VOLTMETER

CONDITIONS OF AC VOLTAGE MEASUREMENT
1. LINE VOLTAGE AT 125 160 220 VOLTS 50~
2. LOUDNESS AT MAXIMUM BALANCE BASS AND TREBLE AT ½ SW1 POSITION: PHONO
3. AMPLIFIER INPUTS CONNECTED TO A SOURCE AS ABOVE INDICATED f = 1000 cps
4. VOLTAGES MEASURED BETWEEN INDICATED POINTS AND POINT 4 OF PRINTED BOARD WITH VOLTMETER OF 1 MΩ OR MORE INPUT RESISTANCE

Schema elettrico LF 760/R